ServoFit™ Gearhead
Motor Mounting Instructions

Table No. 1 Tolerances for Motors

k6 - Shaft Diameter	Metric (μm)	Imperial (ins.)
over 6 - 10	+10 / +1	+.00039 / +.00004
over 10 - 18	+12 / +1	+.00047 / +.00004
over 18 - 30	+15 / +2	+.00059 / +.00008
over 30 - 50	+18 / +2	+.0007 / +.00008
over 50 - 80	+21 / +2	+.0008 / +.00008
j6 - Pilot Diameter	Metric (μm)	Imperial (ins.)
over 10 - 18	+8 / -3	+.0003 / -.00012
over 18 - 30	+9 / -4	+.00035 / -.00016
over 30 - 50	+11 / -5	+.0004 / -.0002
over 50 - 80	+12 / -7	+.00047 / -.00027
over 80 - 120	+13 / -9	+.0005 / -.00035
over 120 - 180	+14 / -11	+.00055 / -.0004
over 180 - 250	+16 / -13	+.0006 / -.0005
over 250 - 315	+16 / -16	+.0006 / -.0006
over 315 - 400	+18 / -18	+.0007 / -.0007

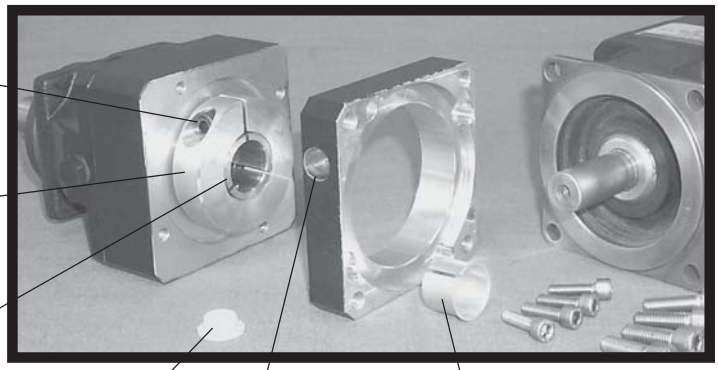

General Information

Servo motors are mounted to ServoFit® gearheads by using a TriAdapt® motor adapter with a clamp coupling or the FlexiAdapt® motor adapter with a bellows shaped thermal expansion feature. These patented adapters require no key but uses a friction locking triple split collet to clamp the shaft. A split bushing is included when the motor shaft is smaller than the input bore in the gearhead. The coupling operates free of backlash and, if installed correctly, requires no maintenance.

Tolerances for the motor must be ISO j6 on the pilot diameter and ISO k6 on the motor shaft, see Table No. 1. The motor shaft does not require a key but shaft runout, pilot concentricity and perpendicularity should meet DIN standard 42955-N when possible.

Important: Clean the motor shaft with degreaser to remove any film of oil or grease.

STEP 1. Remove the access hole plug.

Carefully remove the plastic plug from the access hole in the motor plate.

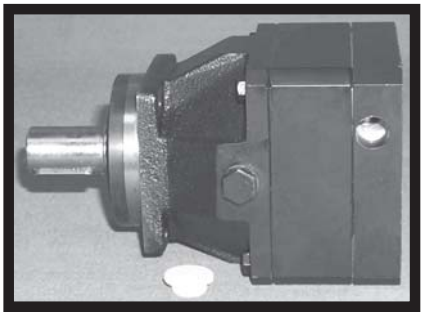

STEP 2. Align TriAdapt screw with access hole.

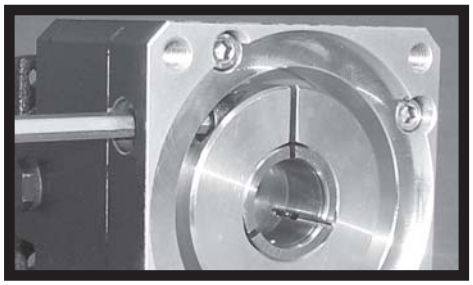

Visually align the access hole with the Allen screw in the clamping ring by turning the gearhead output shaft or the input coupling. (Shown with wrench for illustration only.)

STEP 3. Install bushing (when applicable).

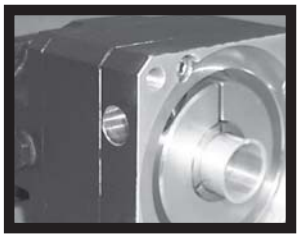

If an adapter bushing is needed, degrease the bushing inside and outside. Align the slot in the adapter bushing with the slot in the TriAdapt coupling hub. Slide the bushing into the input bore until the collar of the bushing touches the shaft end.

STEP 4. Carefully mount the motor.

Place the gearhead (with the bushing installed where necessary) onto the motor shaft. (If there is a keyway in the motor shaft, align the slot in the clamping hub with the keyway.) Support the gearhead while sliding it onto the motor shaft.

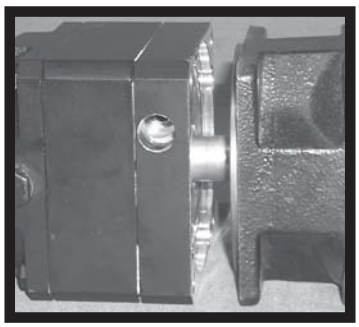

IT IS VERY IMPORTANT THAT THE GEARHEAD IS NOT FORCED ONTO THE SHAFT AND THE MOTOR IS CONCENTRIC WITH THE GEARHEAD COUPLING.

ServoFit™ Gearhead
Motor Mounting Instructions

STEP 5. Bolt the motor to the motor plate.

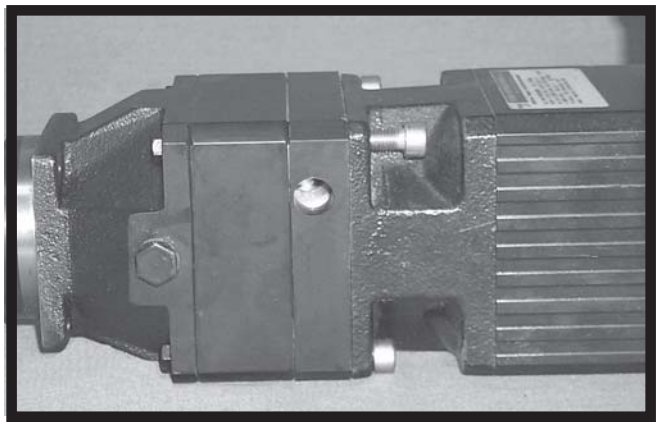

Bolt the motor flange to the gearhead motor plate.

Tighten the motor bolts to the recommended tightening torque shown in Table No. 2.

STEP 6. Tighten the TriAdapt coupling screw.

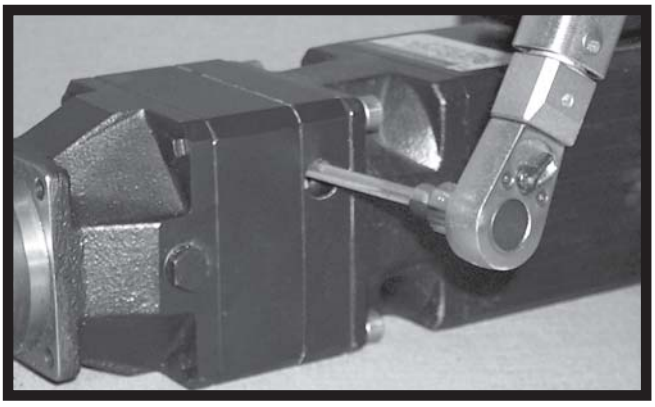

With a torque wrench, tighten the Allen screw on the TriAdapt coupling to the recommended torque shown in Table No. 2. A torque wrench extension is provided with each gearhead. If there are two (2) screws, be sure to tighten them equally.

STEP 7. Re-insert the plastic plug.

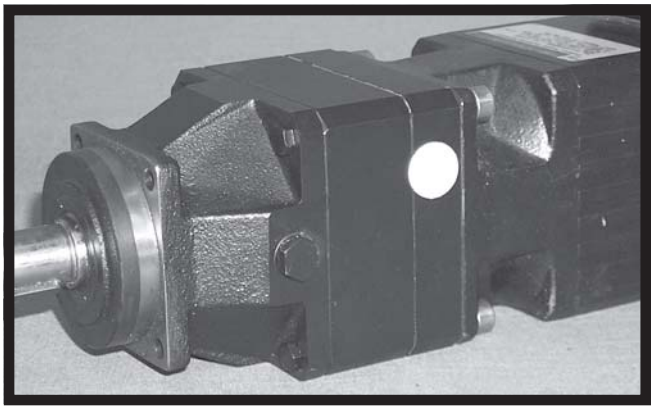

Table No. 2 Capscrew Tightening Torque

Unit	Allen Wrench Size	Tightening Torque Nm.	Tightening Torque in. lbs.
P221, P222, P322	3	3	26.6
P221L, P222L, P321, P322L, P422	5	10	88.5
P321L, P421, P422L, P522	6	25	221.3
P421L, P521, P522L, P722	6	25	221.3
P521L, P721, P722L, P822	8	45	398.3
P721L, P821, P822L, P922	10	60	531
P821L, P921, P922L	14	210	1,858.5
PA322	3	4.5	39.8
PA321, PA422	4	9	35.4
PA321L, PA421, PA522	5	16	141.6
PA421L, PA521, PA522L, PA722	6	40	354.0
PA521L, PA721, PA722L, PA822	8	75	663.8
PA821, PA822L	10	130	1,150.5
P321KX3, P422KX3	4	10	88.5
P421KX4, P521KX5, P522KX4, P722KX5	5	14	123.9
P721KX7, P822KX7	8	45	398.3
P821KX8, P922KX8	10	60	531
PH322	3	3	26.6
PH321, PH322L, PH422	5	10	88.5
PH321L, PH421, PH422L, PH522,	6	25	221.25
PH421L, PH521, PH522L, PH722	6	25	221.3
PH521L, PH721, PH722L, PH822, PH923	8	45	398.3
PH821, PH912, PH1012, PH1023	10	60	531
PHA322	3	4.5	39.8
PHA321, PHA422	4	9	35.4
PHA321L, PHA421, PHA522	5	16	141.6
PHA421L, PHA521, PHA722	6	40	354.0
PHA521L, PHA721, PHA822, PHA923	8	75	663.8
PHA821, PHA1012, PHA1023	10	130	1,150.5
PH321KX3, PH422KX3	4	10	88.5
PH421KX4, PH521KX5	5	14	123.9
PH522KX4, PH722KX5	5	14	123.9
PH721KX7, PH822KX7	8	45	398.3
PH821KX8, PH912KX8	10	60	531
PE2	4	10	88.5
PE3	5	17	150.5
PE4	6	42	371.7
PE5	8	83	734.6
ServoFit Gearheads – "C", "F", or "K"			
MT10	5	10	88.5
MT20	6	25	221.3
MT30	8	45	398.3
MT40	10	60	531
MT50	14	210	1,858.5

STOBER Drives Inc.
1781 Downing Drive • Maysville, KY 41056
Phone: 606 759-5090 • FAX: 606 759-5045
www.stober.com • E-mail: sales@stober.com

October 2007 Printed in U.S.A. Form No. 2008